STYLE 14 B
CAP
SPHERICAL BRG.

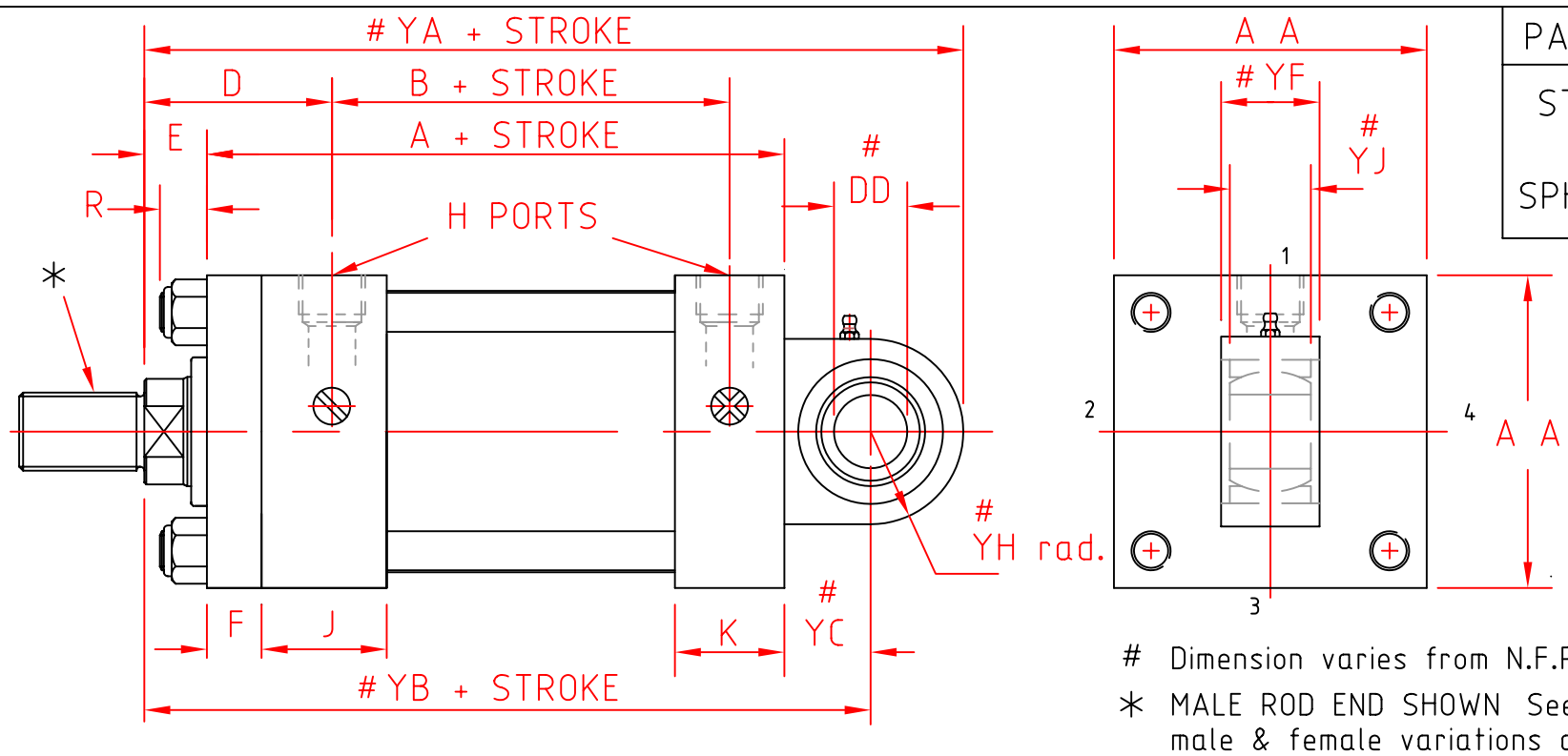

Dimension varies from N.F.P.A. standard.

* MALE ROD END SHOWN See sheet 4 for male & female variations and dimensions Non-std. rod threads may be specified for use with spherical bearing rod ends.

Single Slotted CUSH. ADJ. Cross Slotted CUSH. Relief (Fixed)

CYLINDER SIZE	ROD DIA. E E	E	D	# YA	# YB	A	AA	B	F	H BSPP.	J	K	R	YC	Y J	YF	YH	DD
HB 15	0.625" STD. 15.87	0.63" 15.87	2.00" 50.8	8.105" 205.87	7.121" 180.87	5.00" 127.0	2.50" 63.5	2.88" 73.02	0.38" 9.52	1/2"	1.75" 44.45	1.50" 38.1	0.50" 12.7	1.496" 38.0	0.63" 16.0	0.75" 19.0	0.98" 25.00	0.787" 20.00
1.50" BORE	1.000" 25.4	1.00" 25.4	2.38" 60.32	8.48" 215.39	7.50" 190.4													
HB 20	1.000" STD. 25.4	0.75" 19.05	2.38" 60.32	8.48" 215.39	7.50" 190.4	5.25" 133.35	3.00" 76.2	2.88" 73.02	0.62" 15.87	1/2"	1.75" 44.45	1.50" 38.1	0.63" 15.87	1.496" 38.0	0.63" 16.0	0.75" 19.0	0.98" 25.00	0.787" 20.00
2.00" BORE	1.375" 34.92	1.00" 25.4	2.63" 66.68	8.73" 221.64	7.75" 196.75													
HB 25	1.000" STD. 25.4	0.75" 19.05	2.38" 60.32	8.60" 218.46	7.62" 193.57	5.38" 136.52	3.50" 88.9	3.00" 76.2	0.62" 15.87	1/2"	1.75" 44.45	1.50" 38.1	0.63" 15.87	1.496" 38.0	0.63" 16.0	0.75" 19.0	0.98" 25.00	0.787" 20.00
2.50" BORE	1.375" 34.92	1.00" 25.4	2.63" 66.68	8.85" 224.80	7.87" 199.92													
	1.750" 44.45	1.25" 31.75	2.88" 73.02	9.10" 231.15	8.12" 206.27													
HB 32	1.375" STD. 34.92	0.88" 22.22	2.75" 69.85	9.98" 253.47	8.89" 225.97	6.25" 158.75	4.50" 114.3	3.50" 88.9	0.75" 19.05	3/4"	2.00" 50.8	1.75" 44.45	0.75" 19.05	1.772" 45.0	0.79" 20.0	0.91" 23.0	1.08" 27.5	0.984" 25.00
3.25" BORE	1.750" 44.45	1.13" 28.57	3.00" 76.2	10.23" 259.82	9.14" 232.32													
	2.000" 50.8	1.25" 31.75	3.13" 79.38	10.35" 263.0	9.27" 235.5													
HB 40	1.750" STD. 44.45	1.00" 25.4	3.00" 76.2	11.66" 296.17	10.02" 254.67	6.63" 168.27	5.00" 127.0	3.75" 95.25	0.88" 22.22	3/4"	2.00" 50.8	1.75" 44.45	0.75" 19.05	2.401" 61.0	0.98" 25.00	1.18" 30.0	1.63" 41.5	1.378" 35.0
4.00" BORE	2.000" 50.8	1.13" 28.57	3.13" 79.37	11.78" 299.35	10.15" 257.85													
	2.500" 63.5	1.38" 34.92	3.38" 85.73	12.03" 305.7	10.40" 264.2													
HB 50	2.000" STD. 50.8	1.13" 28.57	3.13" 79.37	13.44" 341.55	11.28" 286.55	7.13" 180.97	6.50" 165.1	4.25" 107.95	0.88" 22.22	3/4"	2.00" 50.8	1.75" 44.45	1.06" 26.98	3.031" 77.0	1.26" 32.0	1.58" 40.0	2.17" 55.0	1.771" 45.0
5.00" BORE	2.500" 63.5	1.38" 34.92	3.38" 85.73	13.69" 347.9	11.53" 292.9													
	3.000" 76.2	1.38" 34.92	3.38" 85.73	13.69" 347.9	11.53" 292.9													
	3.500" 88.9	1.38" 34.92	3.38" 85.73	13.69" 347.9	11.53" 292.9													
HB 60	2.500" STD. 63.5	1.25" 31.75	3.50" 88.9	15.51" 393.97	13.09" 332.47	8.38" 212.72	7.50" 190.50	4.88" 132.82	1.00" 25.4	1.00"	2.25" 57.15	2.25" 57.15	1.12" 28.57	3.464" 88.0	1.38" 35.0	1.57" 40.0	2.42" 61.5	1.968" 50.0
6.00" BORE	3.000" 76.2	1.25" 31.75																
	3.500" 88.9	1.25" 31.75																
	4.000" 101.6	1.25" 31.75																
HB 70	3.000" STD. 76.2	1.25" 31.75	3.81" 96.83	18.50" 470.05	15.28" 388.05	9.50" 241.3	8.50" 215.9	5.38" 136.52	1.00" 25.4	1,1/4"	2.75" 69.85	2.75" 69.85	1.25" 31.75	4.527" 115	1.93" 49.0	2.17" 55.0	3.23" 82.0	2.756" 70.0
7.00" BORE	3.500" 88.9	1.25" 31.75																
	4.000" 101.6	1.25" 31.75																
	5.000" 127.0	1.25" 31.75																
HB 80	3.500" STD. 88.9	1.25" 31.75	3.94" 100.0	20.84" 529.45	17.30" 439.45	10.50" 266.7	9.50" 241.3	6.13" 155.57	1.00" 25.4	1,1/2"	3.00" 76.2	3.00" 76.2	1.38" 34.92	5.551" 141.0	2.17" 55.0	2.36" 60.0	3.54" 90.0	3.150" 80.0
8.00" BORE	4.000" 101.6	1.25" 31.75																
	5.000" 127.0	1.25" 31.75																
	5.500" 139.7	1.25" 31.75																